101

COPENHAGEN

DROP CHANDELIER BULP MINI // ASSEMBLY INSTRUCTIONS

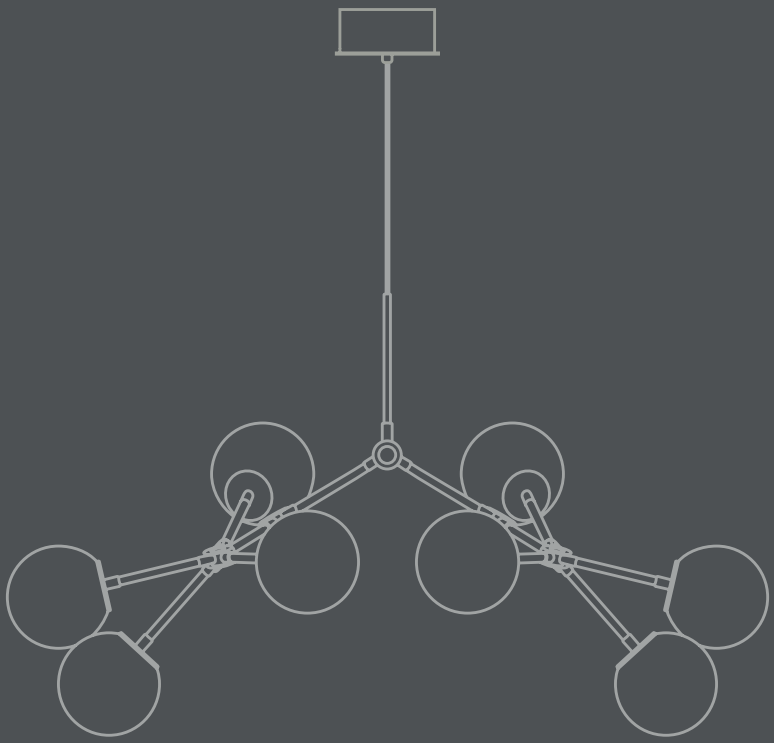

ABOUT 101 COPENHAGEN

101 Copenhagen is a Danish design brand founded in 2017. With a vision to honor exquisite quality and craftsmanship, the collection encompasses furniture, lighting and accessories in a timeless, yet modern design. With a true passion for materials and refined textures, organic shapes and colours, 101 Copenhagen presents the epitome of classics and must-have novelties for Scandinavian and international interior connoisseurs alike.

OUR CREATIVE DRIVE

The design of 101 Copenhagen is firmly rooted in the Scandinavian soil and nourished by Japanese minimalist aesthetics. Sharing an emphasis on quality materials, techniques and traditions, the meeting between the North and the East is notable in the holistic collections of 101 Copenhagen. The design approach is dynamic and characterised by freedom of expression - creating unique and timeless pieces without compromising on playfulness and individualit.

OUR DESIGN TEAM

An attention to detail and a shared sense of aesthetics is what drives the two main designers of 101 Copenhagen, Tommy Hyldahl and Kristian Sofus Hansen. Merging their backgrounds and experiences from the fashion industry, the Royal Danish Academy of Fine Arts and travels in Japan respectively, a narrative of minimalist, sculptural and conceptual design is evident throughout the collections. Translating and transforming the simplistic inspiration from Japan in a Scandinavian context is all about honouring quality, heritage and materiality while never seizing to compromise on form and function. Trained as an architect, the third designer, Nicolaj Nøddesbo, adds knowledge on innovative light solutions and timeless novelties to the 101 Copenhagen collections. 101 Copenhagen is a curated selection of tactile, bold objects standing out in a crowd and gathers as a whole.

101 COPENHAGEN ©

CONGRATULATIONS
ON YOUR NEW PRODUCT FROM
101 COPENHAGEN

101

COPENHAGEN

Drop Chandelier Bulp Mini

The Drop chandelier bulp collection is inspired by Danish Modernism and the 1950s iconic and experimental approach to lightning design. With circular opal glass lampshades and 14 adjustable arms, the chandelier embraces flexible and functional lighting. The lamps detailed suspension is inspired by industrial and maritime references, and beautifully crafted in plated metal subsequent hand brushed. The chandelier elegantly brightens the room with a warm light and becomes a sculptural object in the ceiling. The adjustable arms create countless variations, which can be customized to any interior scheme. Designed by Kristian Sofus Hansen & Tommy Hyldahl.

Type: Chandelier / Indoor
Designer / Year of design:
Kristian Sofus Hansen & Tommy Hyldahl, 2017

Colour / Material:
Glass: Opal glass / white
Metal: Plated metal / Grey
Cable: Fabric covered cable / Black

Dimensions:
L97 /W71 / H55 CM
Ceiling cup: H13 /W4,5 CM
Cable: 500 CM

Country of origin: CN
Product weight: 4,7 Kgs
Packaging:
Dimensions: L85 / W85 / H21 CM
Total weight incl. product: 7,90 Kgs
Number of parcels: 1
Material: Brown cardboard

Light source:
Socket: E14 - 230V
Recommended Light Source:
Pygmy - Matt Porcelain - E14

Dimmability: This feature is only possible when the fixture is connected to a dimmer switch and equipped with bulbs that are compatible with dimming.

IP rating: 20 Max Watt: 48

Care instructions:
Use a soft dry cloth to clean the product.
Do not use household cleaners.

Suitable for rooms with a height of 230-320 CM.
Does not comply with US Standards.

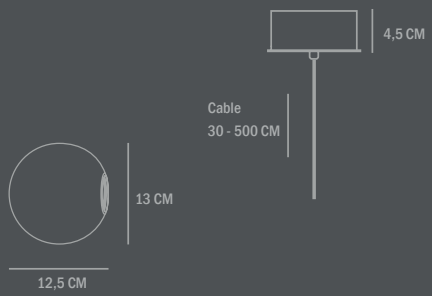

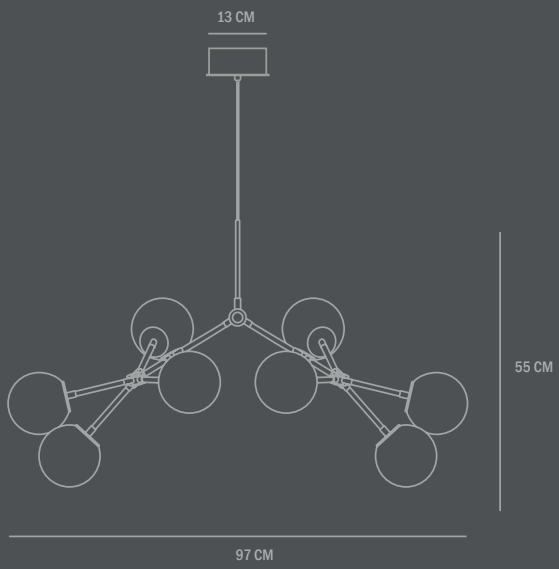

101 COPENHAGEN ©

CEILING HEIGHT

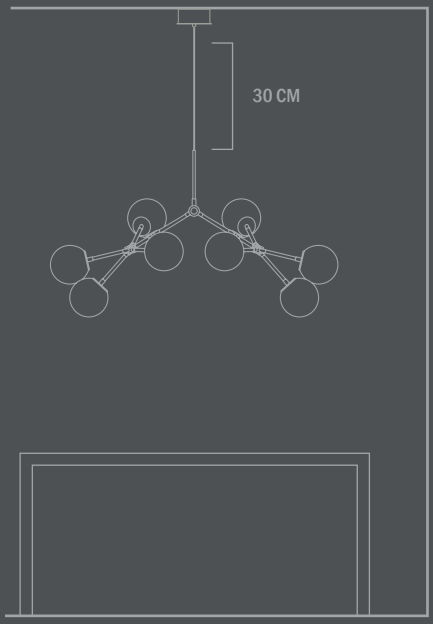

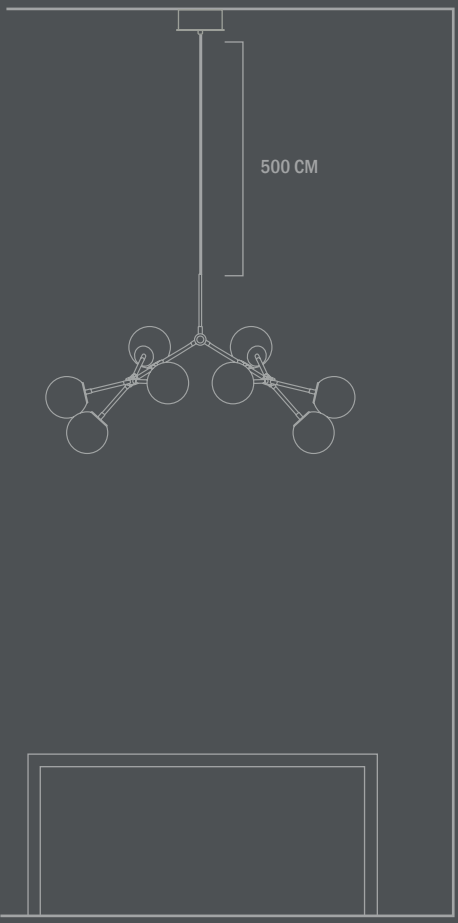

IMPORTANT

Always shut off power to the circuit before starting installation work. In some countries electrical installation work may only be carried out by a authorised electrical contractor. Contact your local electricityauthority for advice.

ASSEMBLY INSTRUCTIONS:

It is recommended to assemble the product with the help of another person for safety reasons.

SAFETY INSTRUCTIONS:

Please note the information contained in these instructions and save this manual, also when lamp is already mounted.

GENERAL INSTRUCTIONS:

- Electrical connections may only be carried out by qualified staff.
- The manufactures do not accept responsibility for injuries or defects caused by improper use of this lamp.
- Attention! Before starting the installation, disconnect the power by turning off the circuit breaker, or by removing the fuse at the fuse box.
- Mind to use this lamp for its predetermined function. For example don't mount indoor lamps in outdoor areas.
- Please check all components are complete before installing.
- Don't cover the lamp.
- Don't connect the lamp to power and don't switch it on when it's in packing.
- Bulbs and transformers get very hot during operating. At improper use there is the risk of fire and by changing the bulb you can hurt yourself. Always let cool down!
- If the external flexible cable or cord is damaged, it shall be exclusively replaced by the manufacturer or his service agent or a similar qualified person in order to avoid a hazard.
- Please ensure that the specified bulb type and power of bulb is used. The maximal wattage shouldn't be exceeded (find the bulb symbol and the "max ... W" on rating label or on lamp).
- Do not mount the lamp on wet or conducting background.
- Make sure that the cables or cords don't get damaged during installation.
- The given main voltage (230V/50Hz) shall not be exceeded.
- Plug and connection elements must be free of tensile strength and torsion force.
- Don't touch bulbs with bare hands.

MAINTENANCE INSTRUCTIONS:

- Before cleaning, disconnect the power by turning off the circuit breaker, or by removing the fuse at the fuse box.
- Mind to clean the surfaces of lamp only.
- Wetness shouldn't get in terminal box or to any conducting part.
- Before you start to clean let it cool down for 10 minutes!
- Cleaning with a soft dry cloth only.

ADVICE FOR ENVIRONMENTAL CARE:

Don't put this article to normal domestic waste after the end of its lifecycle. You have to bring it to a staging area for electrical wastes. The materials are recyclable according to their specifications. With the correct recycling of these materials you can make a significant contribution to environmental protection. Ask your local authority for next staging area.

CE MARKING:

By affixing the CE marking to a product, a manufacturer declares that the product meets all the legal requirements for CE marking and can be sold throughout the European Economic Area (EEA).

TO ASSEMBLE THE ARMS:

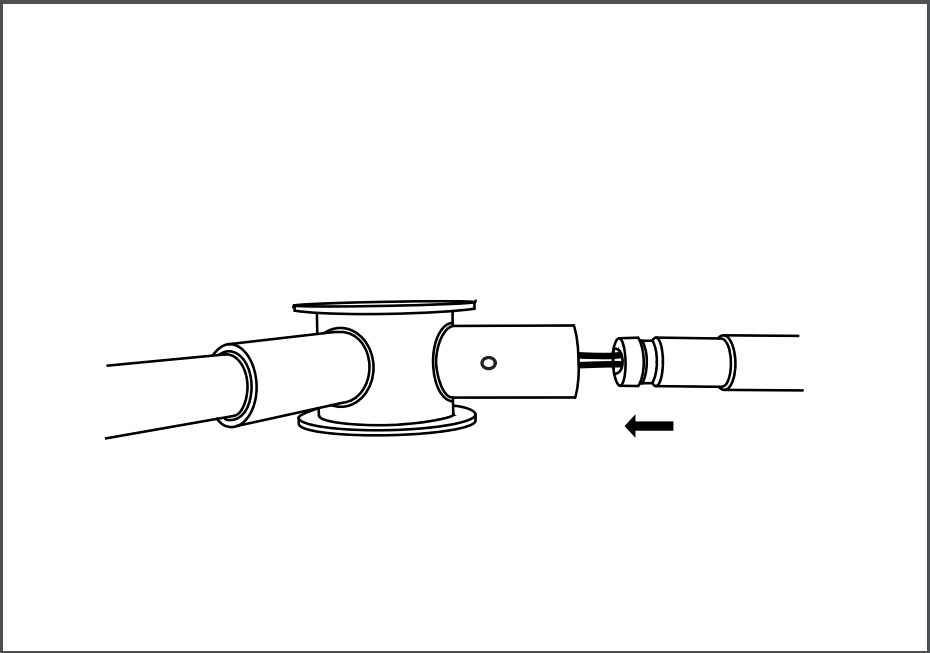

1. Remove the screw and carefully connect the tube.

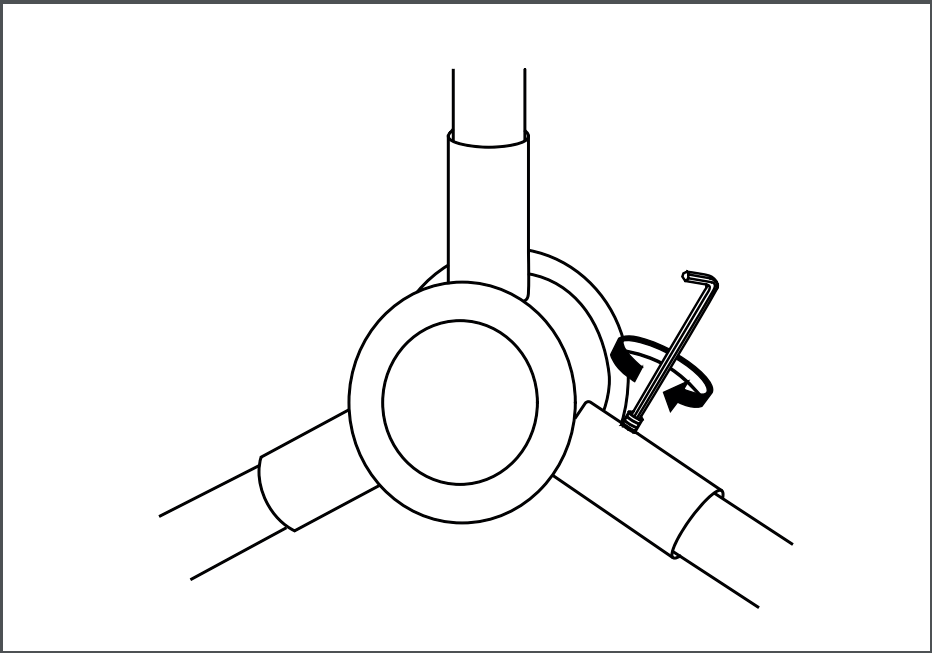

2. Tighten the screw with a wrench

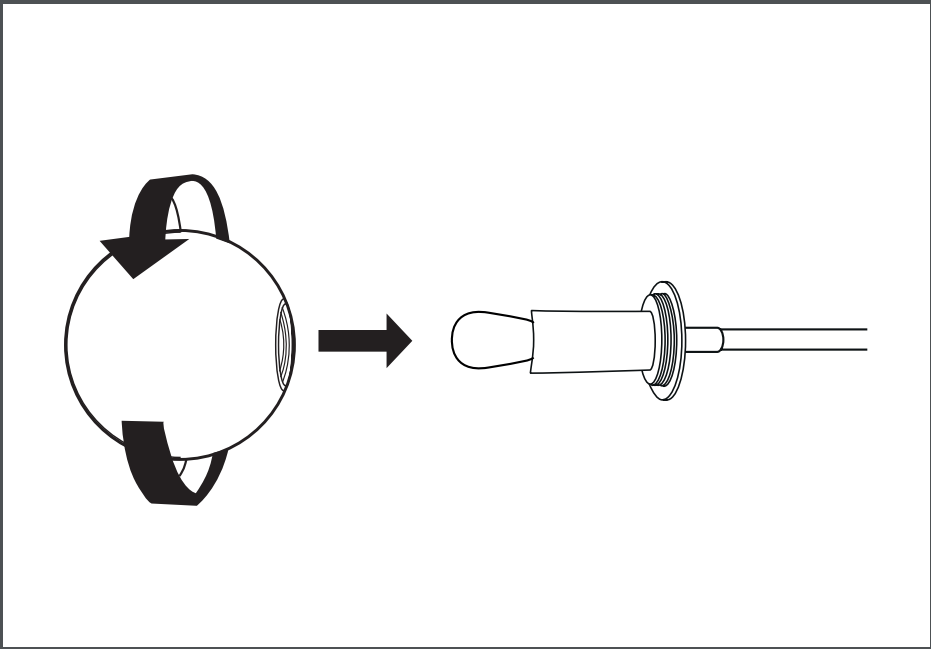

3. Insert light bulb and gently screw the glass screen onto the chandelier arm.

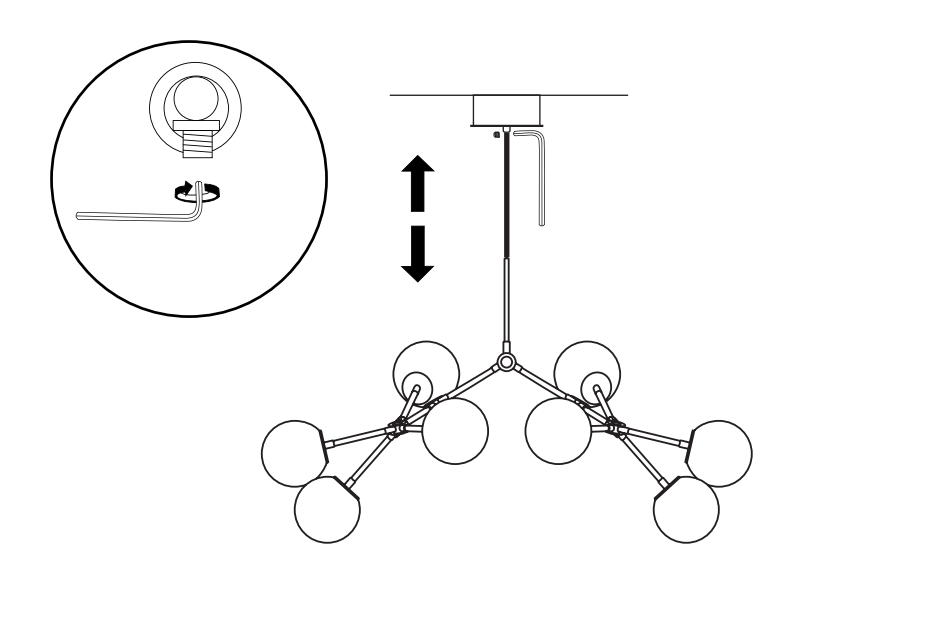

4. Unmount the screw from the small metal ring underneath the ceiling cup, then gently pull down the cable (Never pull the cable, while the screw is fastened in the cable). When the height is adjusted, please fasten the screw to the small metal ring underneath the ceiling cup. When adjusting the cable length always make sure that the cable is held straight and is not twisted as it can damage the fabric cable.

ADJUSTING THE LENGTH OF CABLE

Ceiling Height: 220-250 cm. This ceiling cup is designed to fit large Scandinavian ceiling roses.

1. Adjust the lenght of cable: Unlock the plastic clasp underneath the ceiling cup by loosening the screw reversely. Carefully pull the cable to the desired lenght (never pull the cable, while the screw is fastened in the cable). Close the clasp and tighten with screw turning it clockwise. Make sure it is tightened proberly. Adjust the wires accordingly by unmounting the nuts. Please note the location of the rubber band at fabric covered cable must be placed correctly otherwise the cable will not be fixated properly. Lead the fabric cable from both sides into the cable connector. Please make sure the cable relief is tightened. Screw the ceiling cup to the mounting plate.

2. Lead the fabric cable from both sides into the cable connector. Please make sure the cable relief is tightened.

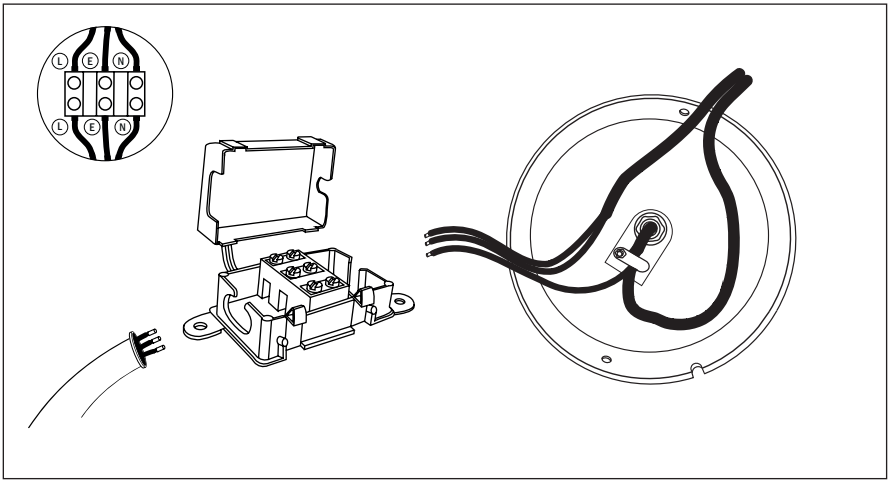

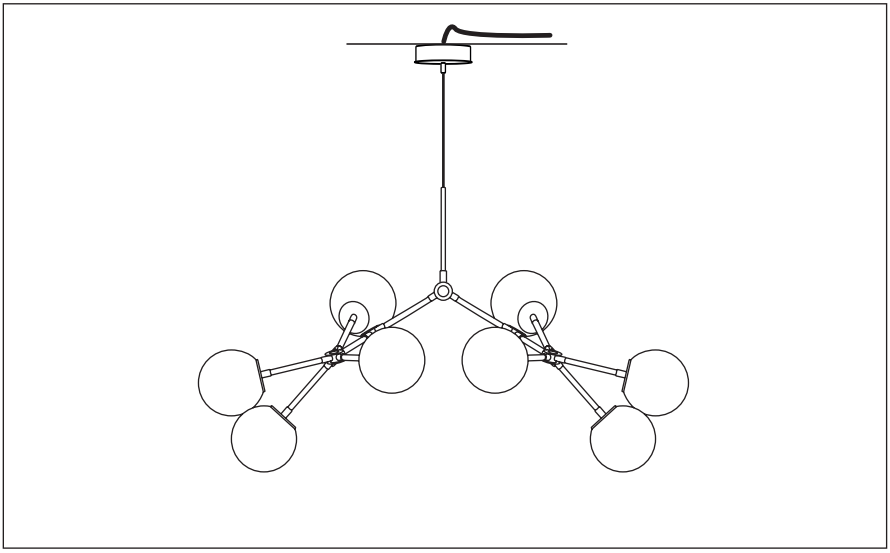

CHANDELIER ATTACHED DIRECTLY TO THE CEILING

Ceiling Height: 220-250 cm. This ceiling cup is designed to fit large Scandinavian ceiling roses.

1. Pull the cable from the ceiling through the mounting plate and mount the ceiling cup to the ceiling, with screws and inner mounting plate following in the package. Please make sure it is fixated proberly.

2. Place the ceiling cup at the mounting plate and turn right until the cieling cup cover the mounting plate.

1.

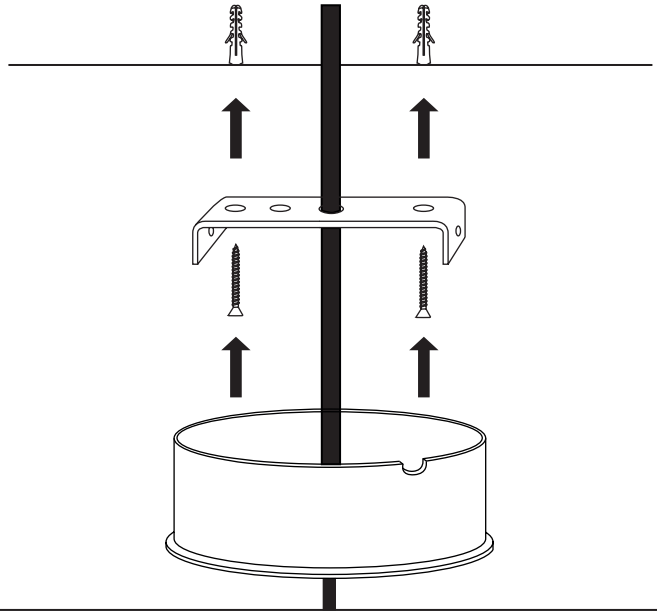

2.

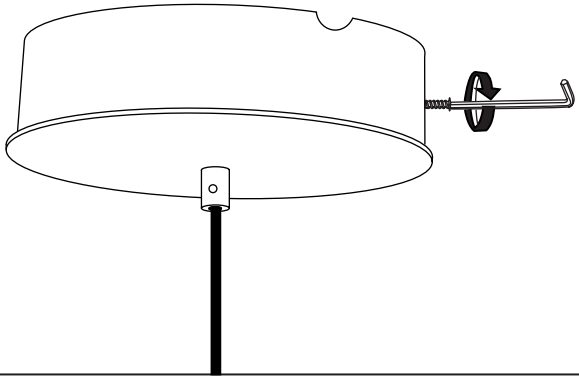

101 COPENHAGEN ©

CHANDELIER ATTACHED DIRECTLY TO THE CEILING WITH CABLE IN CEILING ROSE

Ceiling Height: 220-250 cm. This ceiling cup is designed to fit large Scandinavian ceiling roses.

1. Please mount the ceiling cup to the ceiling, with the screws and inner mounting plate following in the package. Please make sure it is fixated proberly.

2. When the ceiling cup is attached to the ceiling, lead the fabric covered cable out of the hole in the ceiling cup and attached to the ceiling rose. Please make sure the cable relief is tightened.

3.Place the ceiling cup at the mounting plate and tighten with screws.

1.

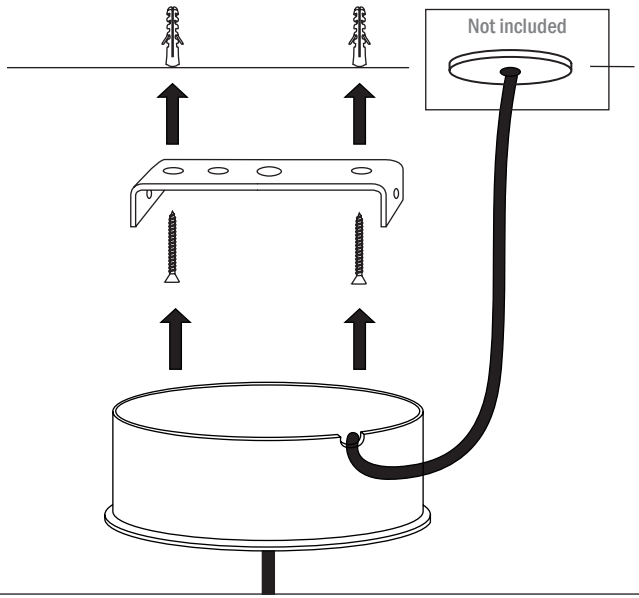

2.

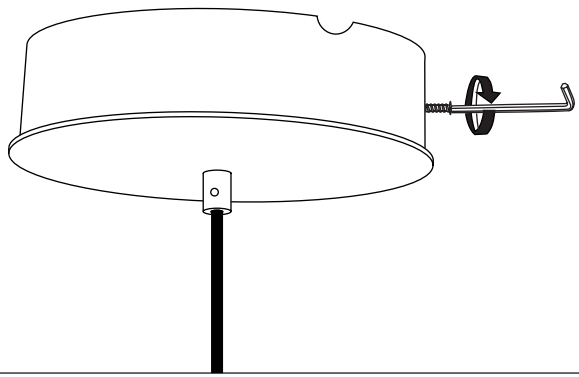

101 CPH

GLOBAL SALES INQUIRIES:SALES@101CPH.COM
SUPPORT INQUIRIES: SUPPORT@101CPH.COM
PRESS INQUIRIES: PRESS@101CPH.COM

PRESS KIT & IMAGEBANK PLEASE GO TO:

WWW.101CPH.COM OR SCAN THE QR CODE AND GAIN ACCESS TO OUR IMAGE BANK,CATALOGUE AND MORE.

SHOWROOM BY APPOINTMENT ONLY // ØSTERGADE 17, 3RD & 4TH FLOOR, 1100 COPENHAGEN, DENMARK.